Tissue Equivalent Proportional Counter Design Options

Les Braby
Nuclear Engineering
Texas A&M

For evaluation of an unknown radiation field for health physics purposes, you have to choose detector parameters that will provide the appropriate evaluation of the radiation

For use in space you also need to consider size, weight, reliability, crew time commitment, and data communications options

Need to select

- Detector boundary (solid wall or wall-less)
- Site size and shape (sphere or cylinder)
- Physical size (count rate, multi cell system)
- Control of electric field and gain (resolution)

Many of these characteristics are interrelated, and also impact system size and reliability

There is no specific way to select the optimum combination of parameters

Generally a detector design is a compromise between preferred characteristics and practical requirements

Lets consider the options and how they effect both the utilization of the resulting data and the adaptability of the detector to the space radiation environment

First consider the boundary of the simulated site

We have a choice of solid wall or some approximation to wall-less

- Solid wall causes wall effect distortion of f(y)
  - Magnitude of distortion depends on type and energy of radiation
  - Partly compensates for difference between y and L due to long range delta rays
  - Consequences of distortion depend on use of data (no effect on measured dose, increase in average quality factor)

- Wall-less design increases size and complexity of detector system
  - Use of electric field lines, plastic grids, or wire spiral to define boundary of site adds complexity
  - Making detection site a part of a larger, homogeneous, medium requires a gas volume that is (at least) several times the detector diameter, with a TE liner inside the stainless steel vacuum chamber

Generally detector volume and weight are limiting factors in space applications so there is a strong preference for use of solid wall

Site Size and Shape

For radiation protection and environmental studies there is no “correct” site size or shape

Some consequences of site size include

- Starters and stoppers if site is too large relative to incident radiation
- Can detect lower values of y, above fixed electronic noise, in larger sites (ε is larger)
- More δ ray loss from smaller sites

Particles with very short range (less than 10μm) are probably not a significant factor in the space radiation environment

Large simulated site sizes can be used

Difference between y and L increases with decreasing site size

Use of two or more different (small) site sizes may provide information on primary particle velocity

Consequences of site shape include

- Chord length distribution and effect on analyzing radiation quality
  - Mean chord length for sphere and “square” cylinder is the same
  - Maximum chord length for random tracks through a square cylinder is 1.414 times the maximum chord length for a sphere of same diameter
  - Chord length distribution for a beam of radiation depends on orientation of cylindrical detector, but is same as for random tracks for a sphere

- Complexity of features required to achieve uniform gas gain
  - Cylinders generally simpler than spheres
  - Spheres often require slightly larger vacuum chambers

For solid walled detectors the difference between cylindrical and spherical designs are relatively minor

Simplification in calibration and data analysis may be worth the slight increase in size, weight, and development time of spherical detectors

Physical Size
(this is related to site size by the gas density)

Count rate is proportional to the cross sectional area of the detector in a given radiation field

At low dose rate need large detectors to get statistically significant data in an acceptable time

- Large events, which typically occur at low rates, can be responsible for a significant fraction of the absorbed dose, so they generally drive the detector size requirements

Q is large for large events so rapid evaluation of dose equivalent requires even larger detectors

If f(y) is known the required detector size can be calculated

A single detector large enough to provide the desired sensitivity may be too large to meet size and weight constraints

A large number of small detectors can have the same area (count rate) as one large detector

Because area increases as r^2 and volume increases as r^3, the small detectors take less space than the large detector

So far this is only practical for cylindrical detectors

If you try to make individual detectors too small it is very difficult to prevent electric field fringing in a significant part of the detector volume

Need to find a compromise based on selected method for maintaining electric field uniformity

25 one cm diameter detectors have the same area as one 5 cm diameter detector but have only 1/5 of the volume

Probably about ½ the volume after including detector walls and amplifiers

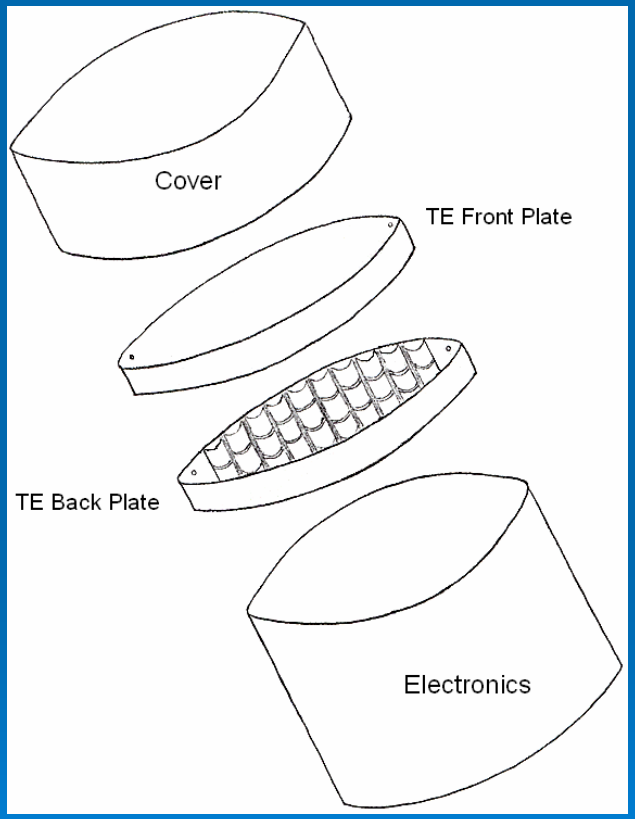

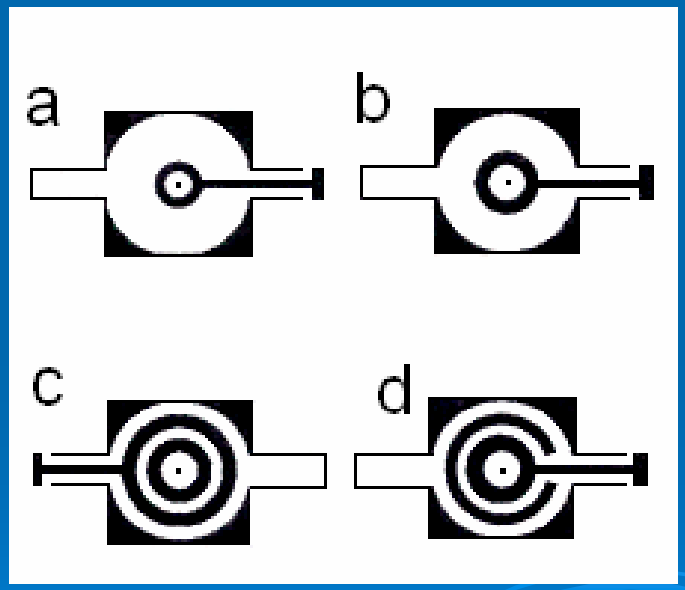

Control of Electric Field

We need a constant electric field along anode in order to have constant gas gain

This means we need to prevent fringing in a cylindrical detector and to compensate for changing distance between cathode and anode in a spherical detector

Solutions for cylindrical detectors are relatively simple

- Best is to use field tubes; length = cylinder radius, which doubles volume of detector
- Alternative is field shaping electrodes which add about 10% to detector volume but makes detector volume slightly uncertain

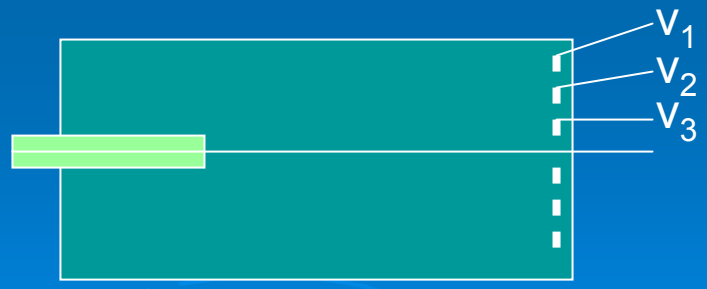

Solutions for spherical detectors tend to generate other problems

- Use helical grid

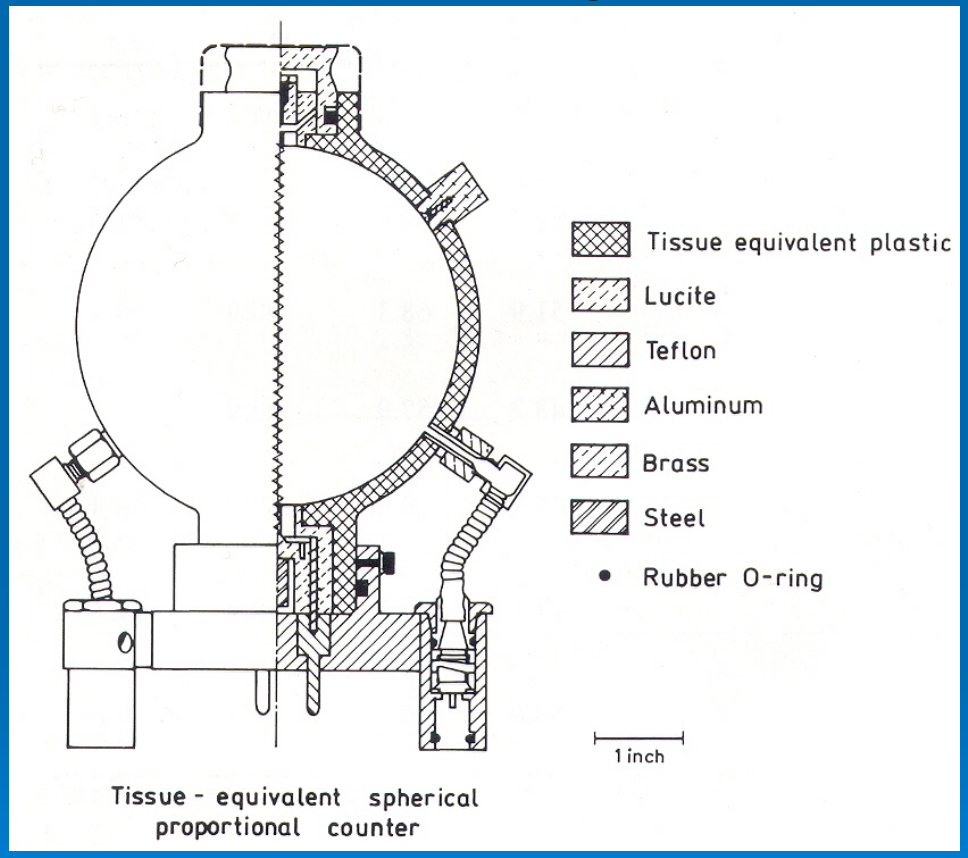

From Rossi

Fig.IV.I5 Typical walled proportional counter employed in microdosimetry.

Grid can vibrate making it microphonic

- Use a field shaping electrode at each end

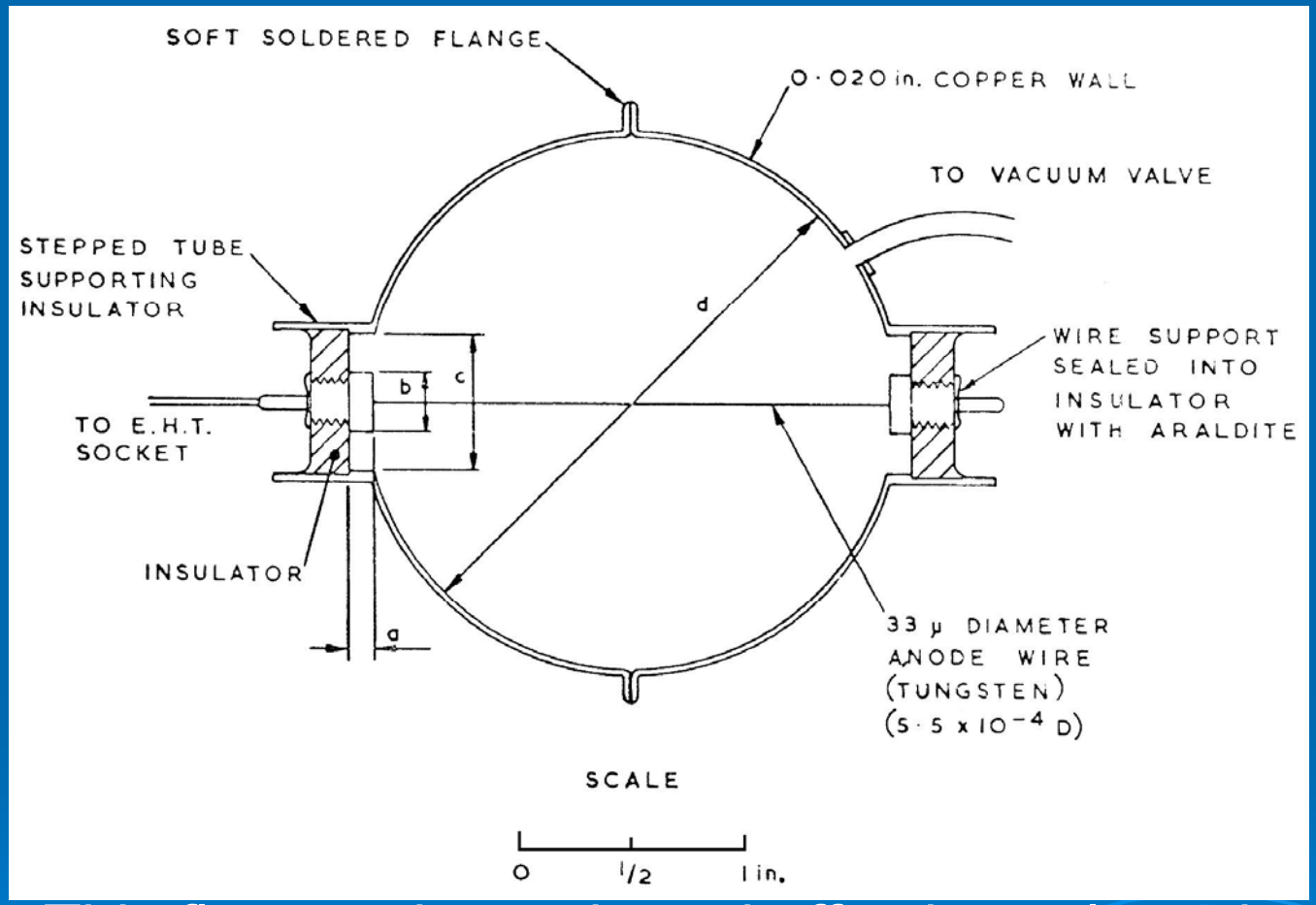

This flattens the ends and effective volume is not known exactly

- Use multiple field shaping electrodes

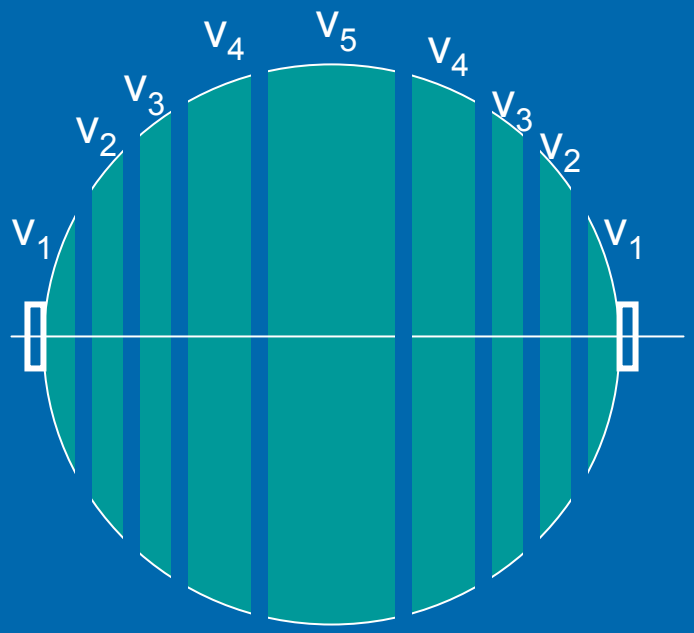

Worked well as a grid-walled detector (Braby and Ellett 1972) but has never been used as a solid-walled detector

Should have well defined volume and low microphonics

Conclusions

- Most applications require solid walled detectors – consider grid walled ones for special experiments
- The benefit of a spherical detectors chord length distribution may override the added weight and complexity of the spherical detector
- Cylindrical, multichamber designs may be required to obtain adequate count rate in very limited detector volumes